2-Port Models

ECE 321: Electronics II

Lecture #13:

Jake Glower

Please visit Bison Academy for corresponding lecture notes, homework sets, and solutions

2-Port Models

Generalized Thevenin Equivalent

Thevenin Equivalents

- The output of a circuit follows a load line
- Any circuit with the same load line behaves the same
- The Thevenin Equivalent is the simplest circuit to obtain the same load line

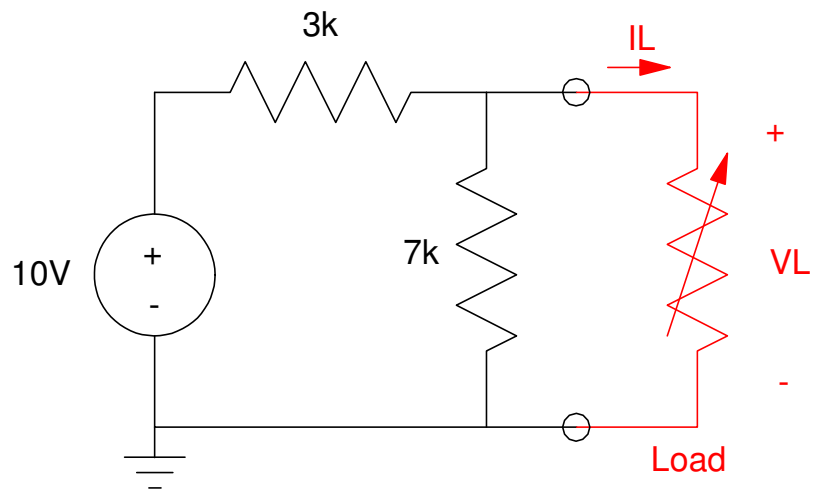

Thevenin Example:

- V_{th}: The voltage at the load with R_L = infinity (7V)
- R_{th}: The resistance looking in with sources turned off: 3k||7k = 2.1k
- I_{short}: The current I_L when RL = 0. $I_{short} = V_{th} / R_{th}$: I_{short} = 10V/3V = 3.33mA

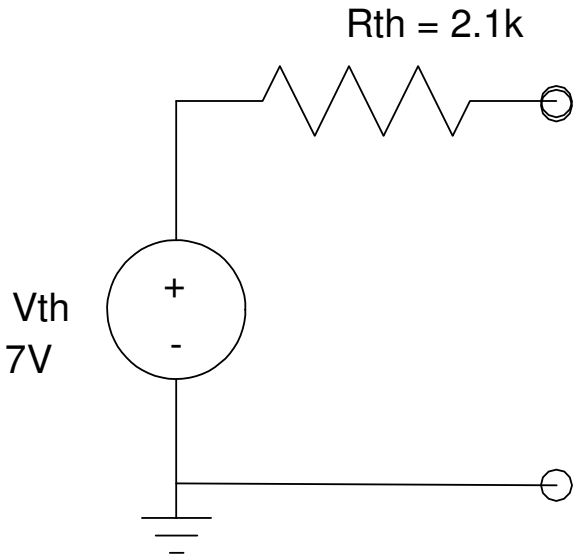

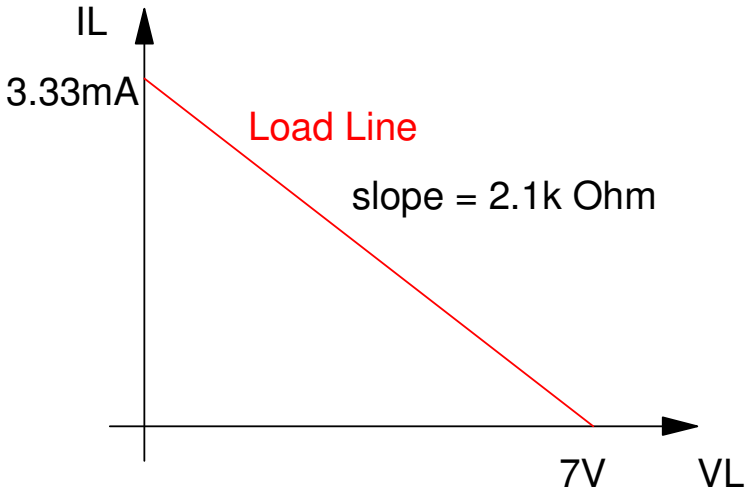

Thevenin Equivalent for Previous Circuit along with its Load Line

2-Port Models

Thevenin equivalent for circuits with

- An input
- An output

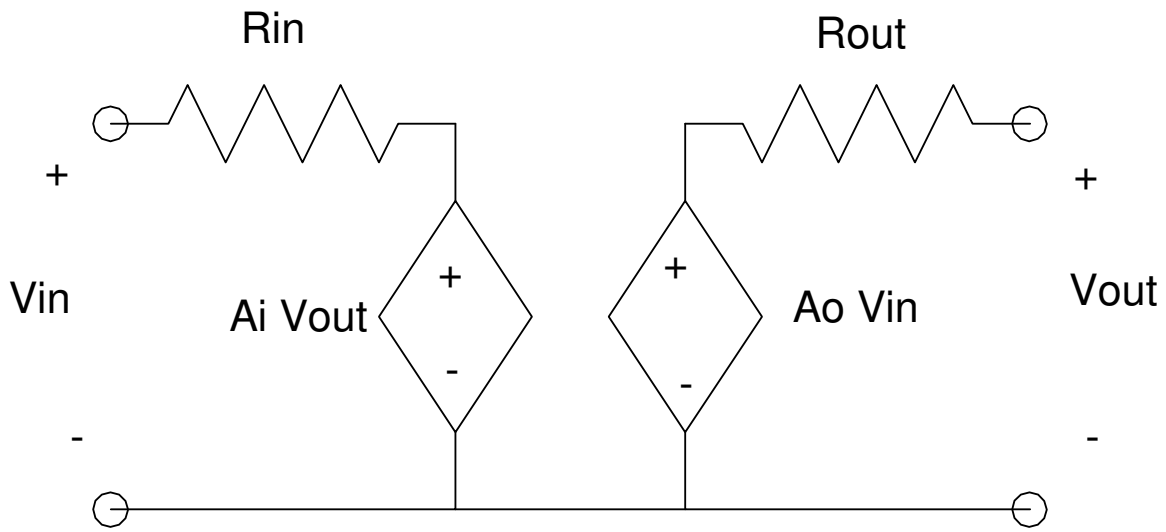

2-Port Parameters:

To determine each of the four 2-port model parameters, four tests are run:

- Ai: Set Vout = 1V and measure Vin. Ai = Vin
- Ao: Set Vin = 1V and measure Vout. Ao = Vout
- Rin: Set Vout = 0V and measure the resistance seen at the input
- Rout: Set Vin = 0V and measure the resistance seen at the output

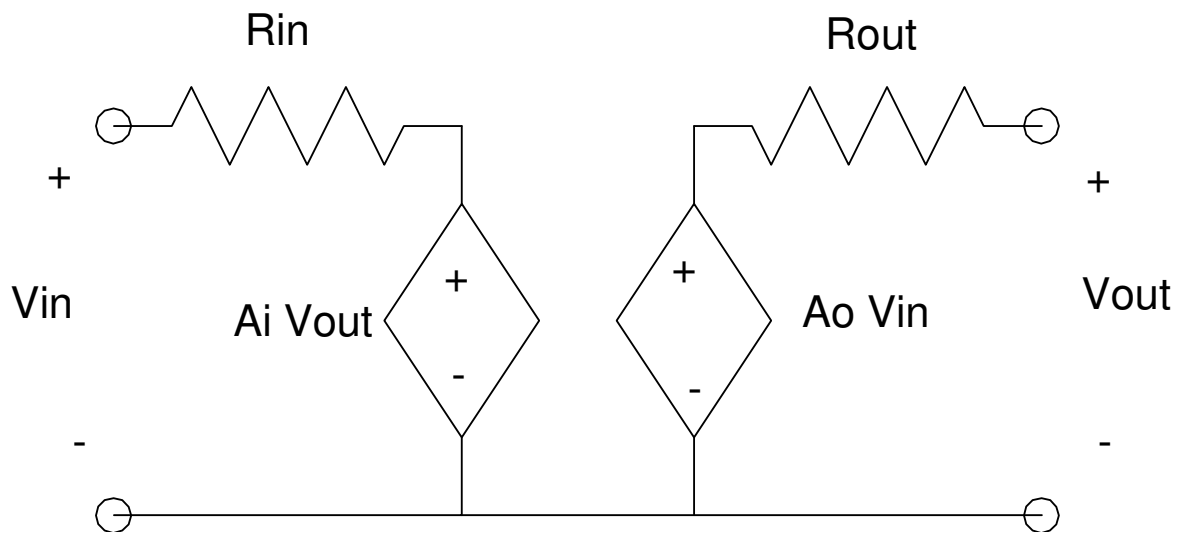

Example: Determine the 2-port model for the following circuit:

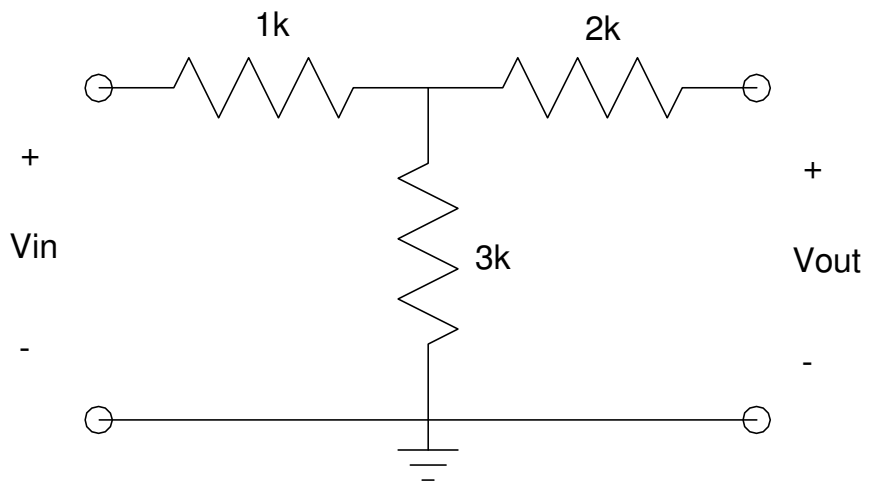

Ai: Set Vout = 1V, measure the voltage at Vin. Ai = Vin

- Ai = 0.6

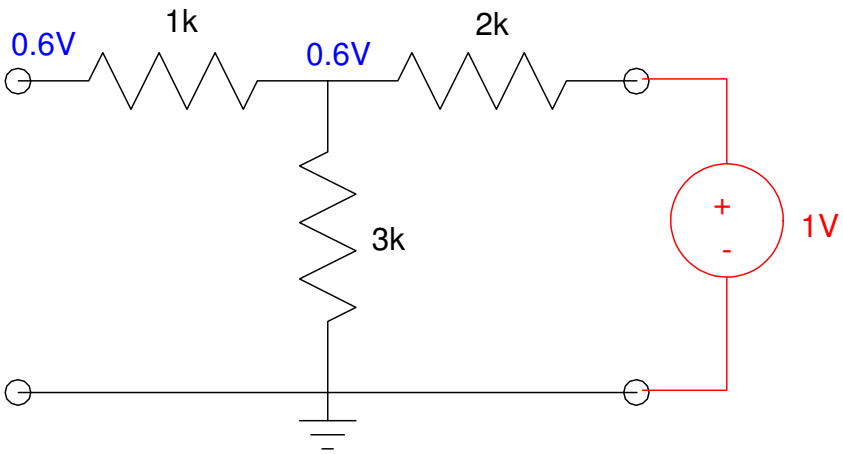

Circuit

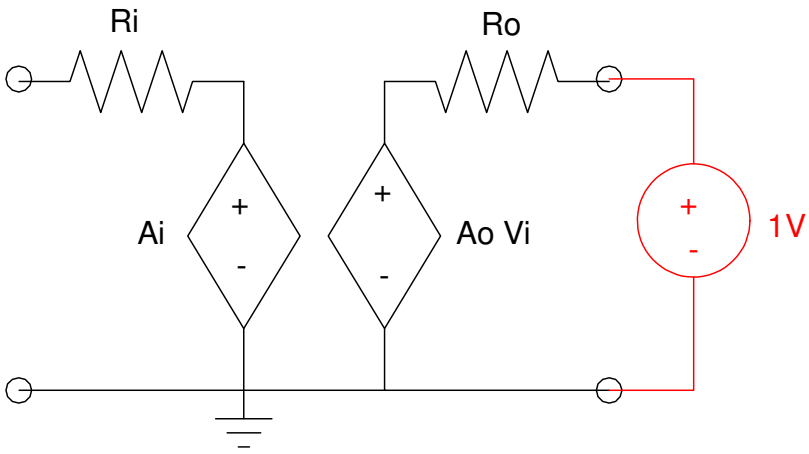

2-Port Model

Ao: Set Vin = 0V, measure the voltage at Vout. Ao = Vout

- Ao = 0.75

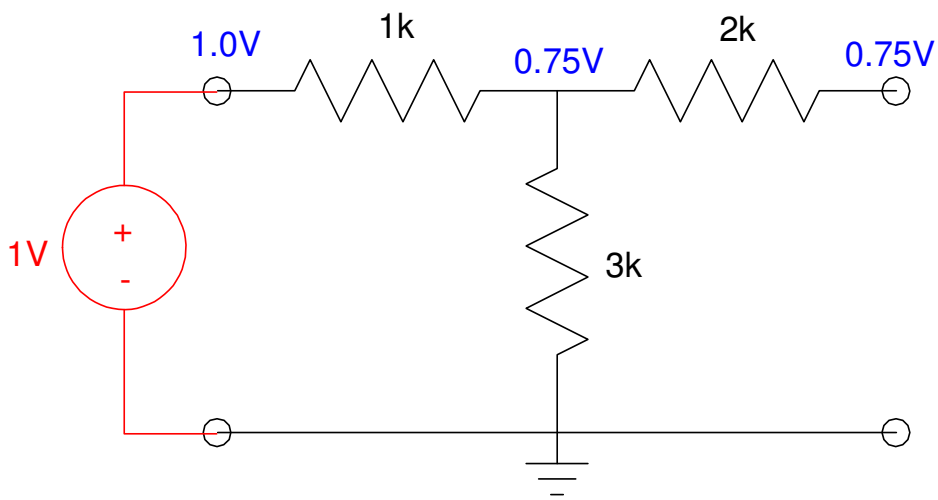

Circuit

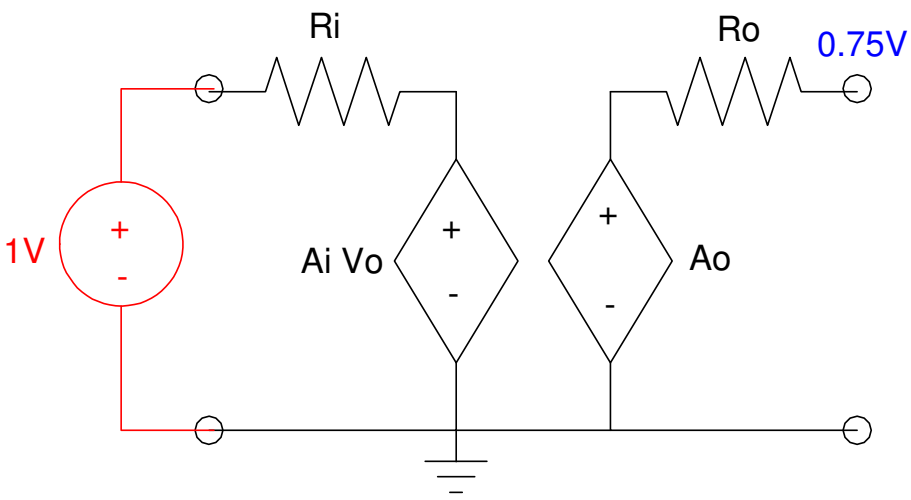

2-Port Model

Rin: Set Vout = 0V, measure the resistance at Vin.

- $R_{in} = 1k + 3k||2k = 2.2k\Omega$

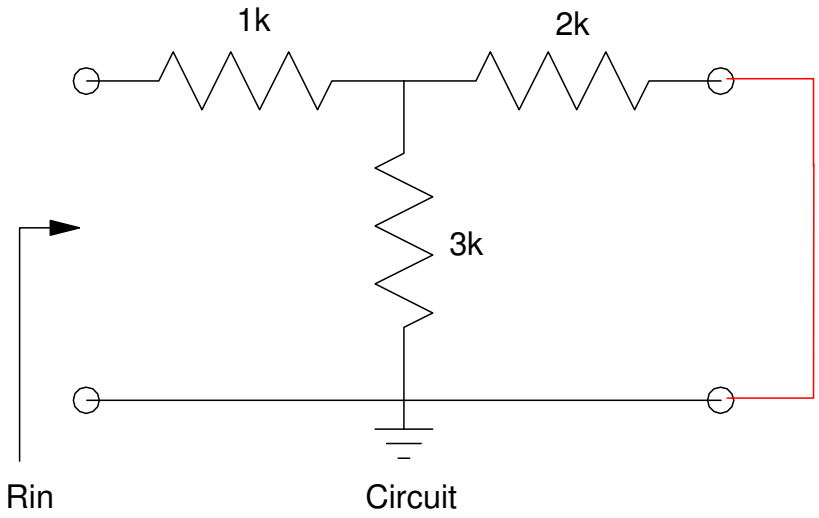

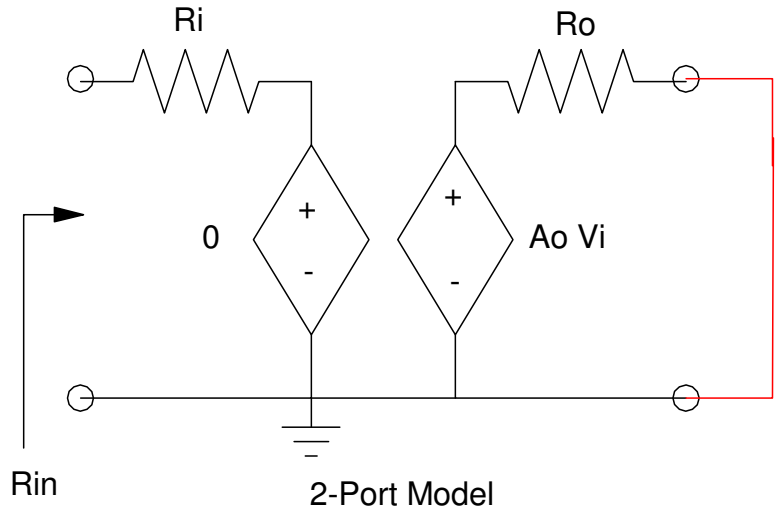

Rout: Set Vin = 0V, measure the resistance at Vout

- Rout = $2k + 1k||3k = 2750\Omega$

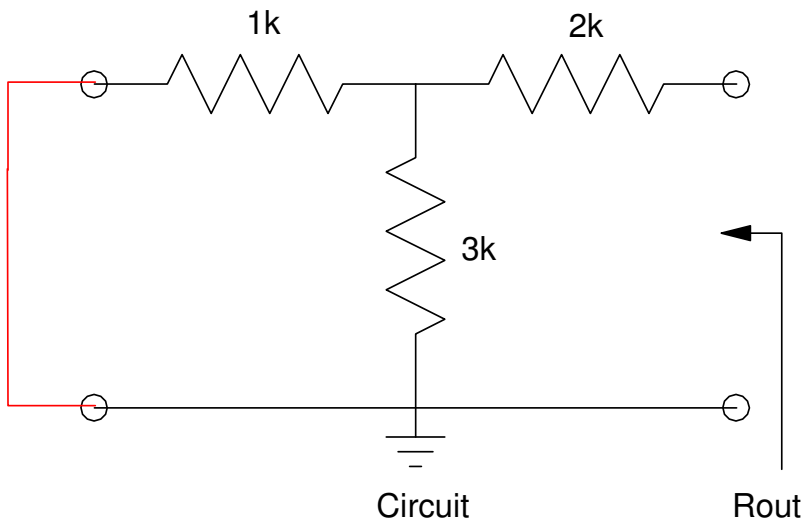

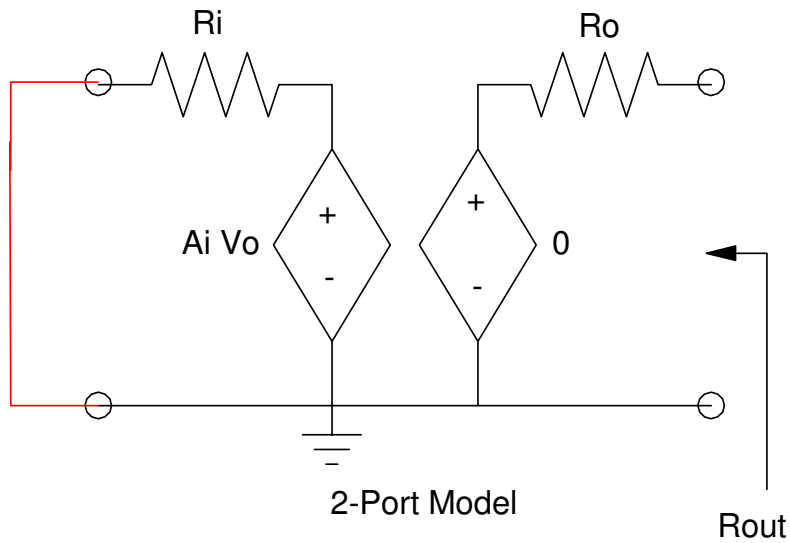

So, the 2-port model is:

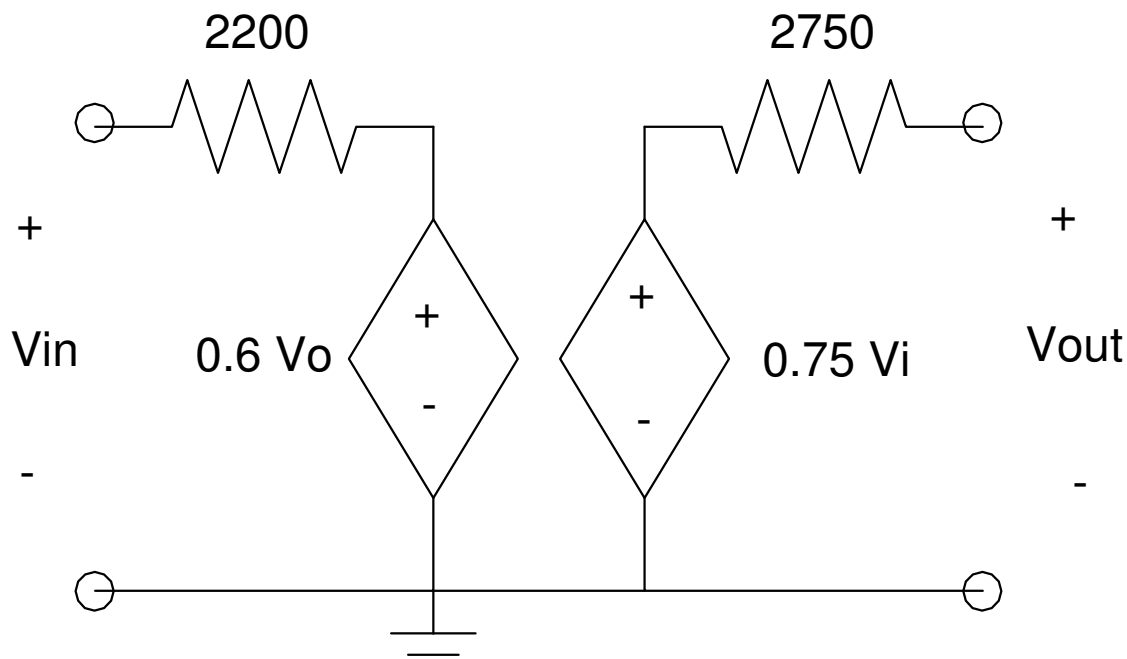

Example 2: When R isn't obvious

- Apply a test voltage (1V typical)
- Compute the current draw
- R = 1V / I

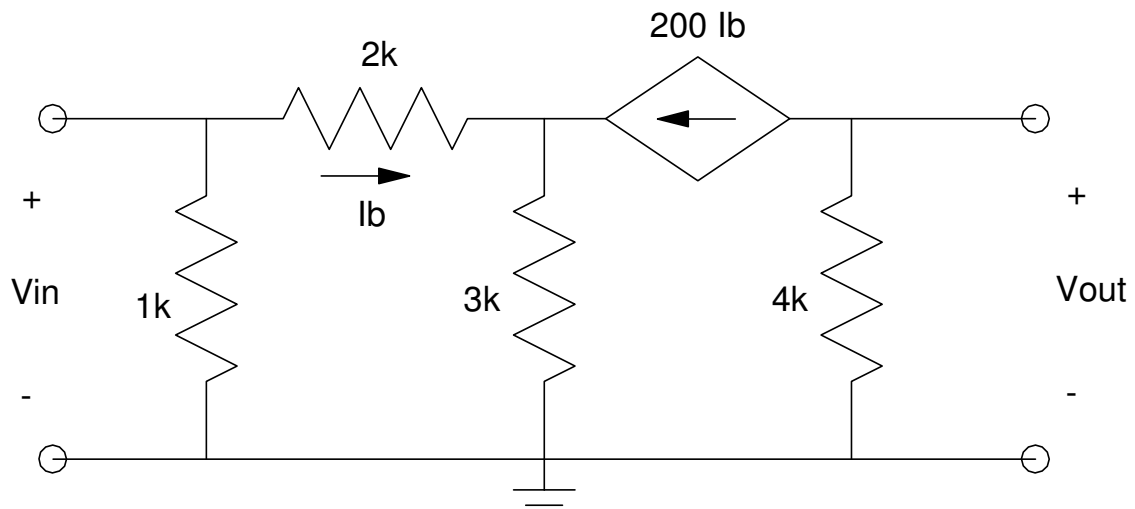

Ai: Set Vout = 1V, measure Vin

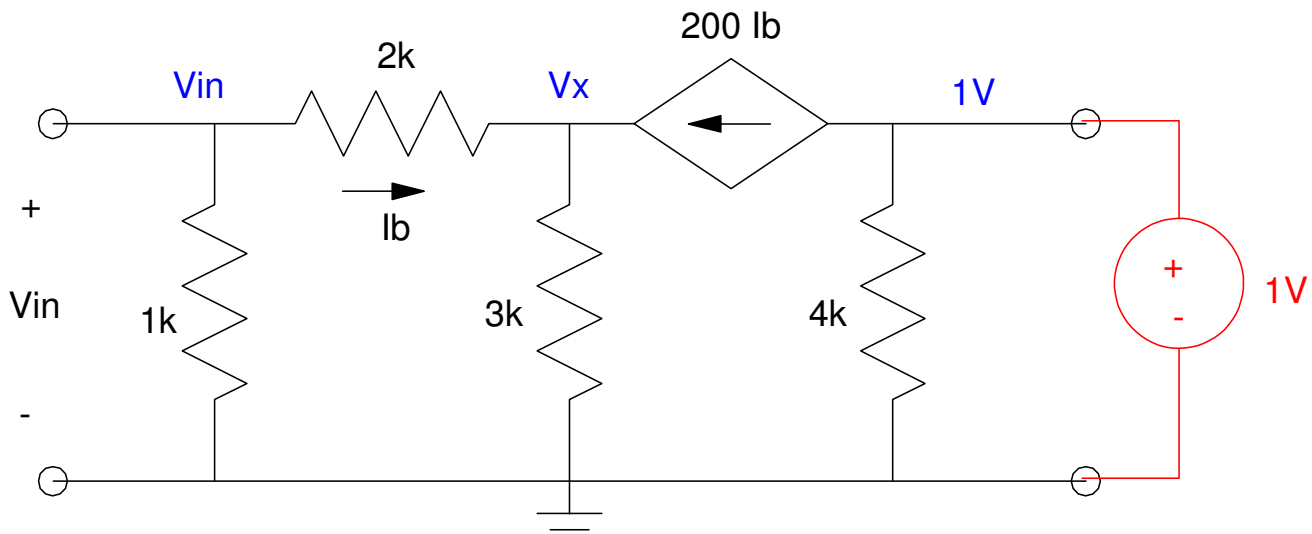

Compute Vx using voltage nodes:

$$\left(\frac{V_x}{1k+2k}\right) + \left(\frac{V_x}{3k}\right) - 200\left(\frac{0-V_x}{3k}\right) = 0$$

$$V_x = 0 \qquad \Rightarrow \qquad \mathbf{Ai = 0}$$

Ao: Set Vin = 1V, measure the voltage at Vo

Find Vx using voltage nodes:

$$\left(\frac{V_x-1}{2k}\right)+\left(\frac{V_x}{3k}\right)-200\left(\frac{1-V_x}{2k}\right)=0$$

$$V_x = 0.9951V$$

$$I_b = \left(\frac{1-V_x}{2k}\right) = 2.469\mu A$$

$$V_o = -(200Ib)4k = 1.9753V$$

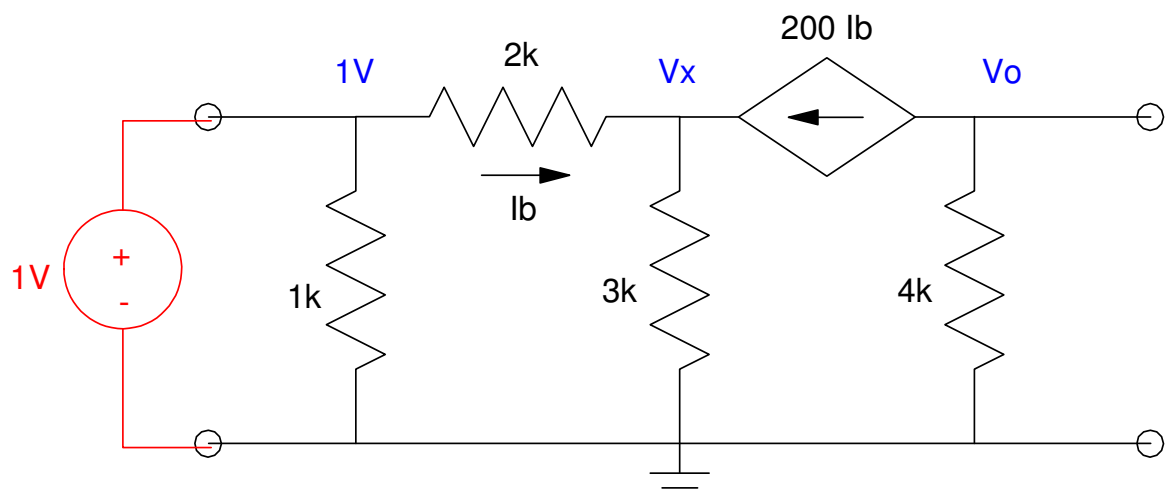

Ao = 1.9753

Rin: Set Vo = 0V, measure the resistance at the input.

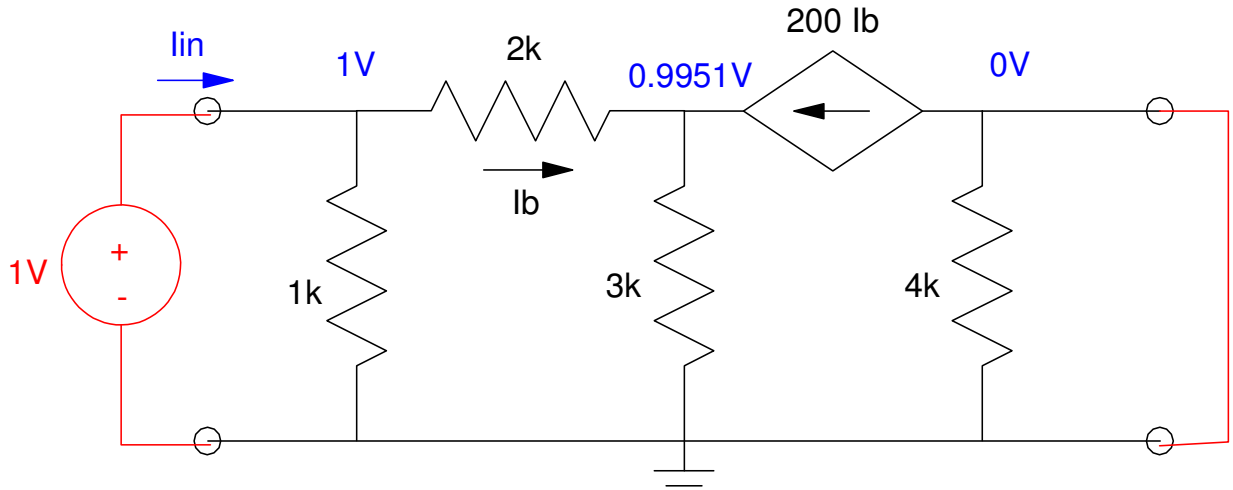

From the previous analysis, Vx = 0.9951V,

$$I_{in} = \left(\frac{1V - 0.9951V}{2k}\right) + \left(\frac{1V}{1k}\right) = 1.0017mA$$

$$R_{in} = \frac{V_{in}}{I_{in}} = \frac{1V}{1.0017mA} = 998\Omega$$

Rout: Set Vin = 0V, measure the resistance at Vout.

This isn't obvious, so add a 1V source at the output and compute the resulting current

Solve for Vx:

$$\left(\frac{V_x - 0}{2k}\right) + \left(\frac{V_x}{3k}\right) - 200\left(\frac{0 - V_x}{2k}\right) = 0$$

Vx = 0

$$I_{out} = 0 + \left(\frac{1V}{4k}\right) = 250uA$$

so

$$R_{out} = \frac{V_{out}}{I_{out}} = \frac{1V}{250uA} = 4k\Omega$$

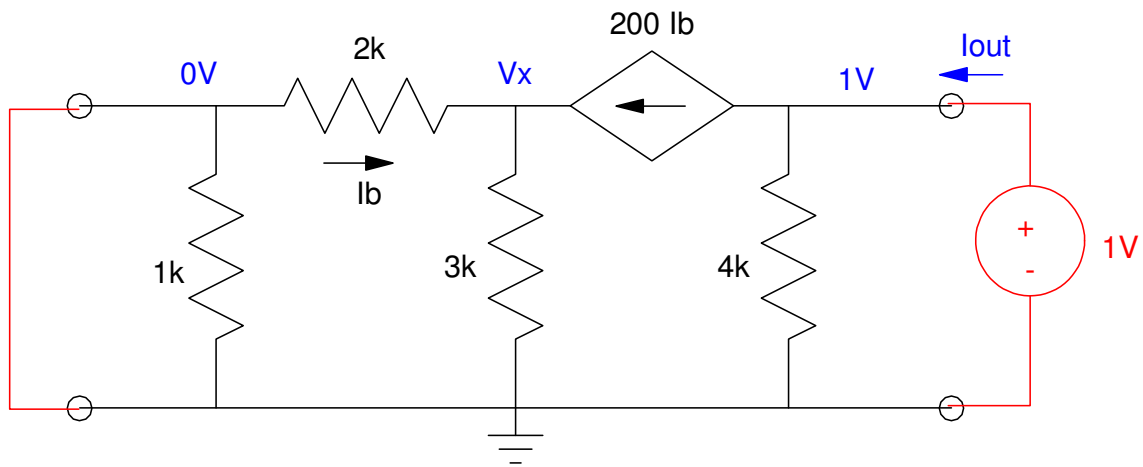

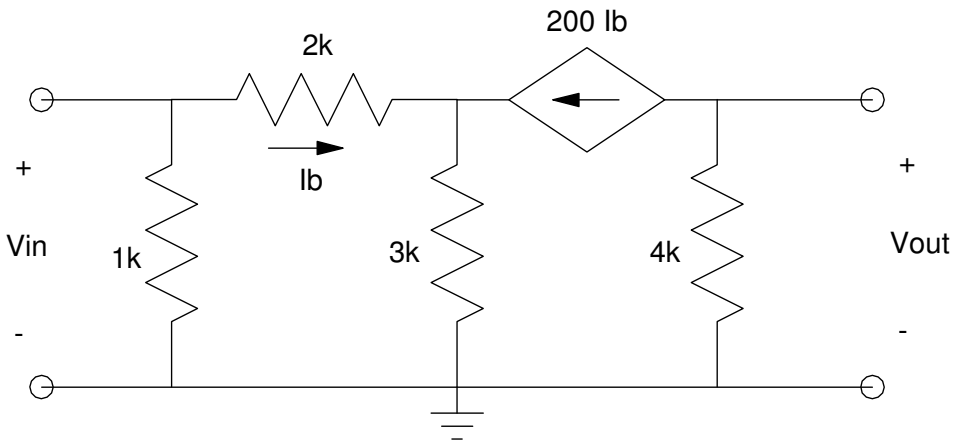
200 Ib
2k
+
Ib
+
Vin
1k
3k
4k
Vout
-
-

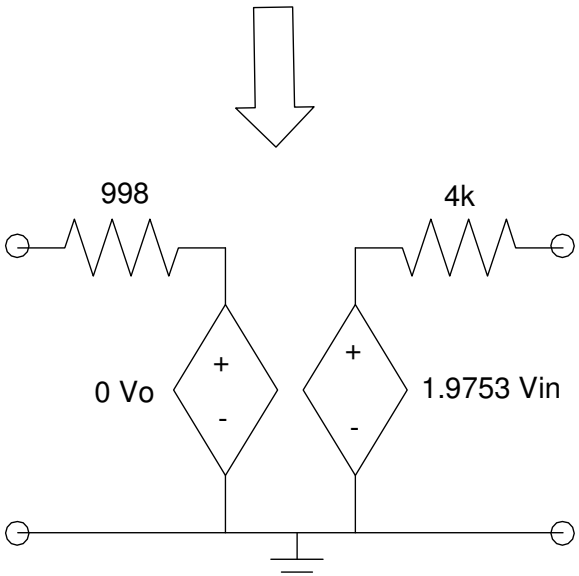
998
4k
+
0 Vo
-
+
1.9753 Vin
-