Operational Amplifiers

EE 206 Circuits I

Jake Glower - Lecture #13

Please visit Bison Academy for corresponding
lecture notes, homework sets, and solutions

Operational Amplifiers

An operational amplifier is a 2-input device with

$$V_o \approx k(V^+ - V^-)$$

where k is a large number. For short, the following symbol is used for an differential amplifier:

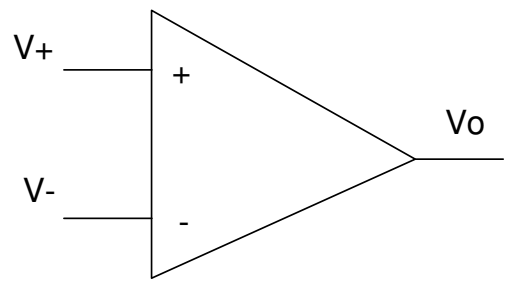

Symbol for an operational amplifier (op-amp)

Operational Amplifier Characteristics

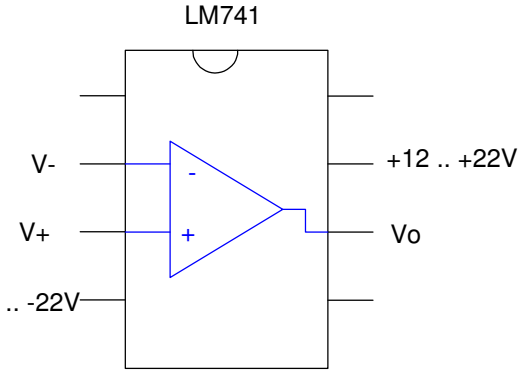

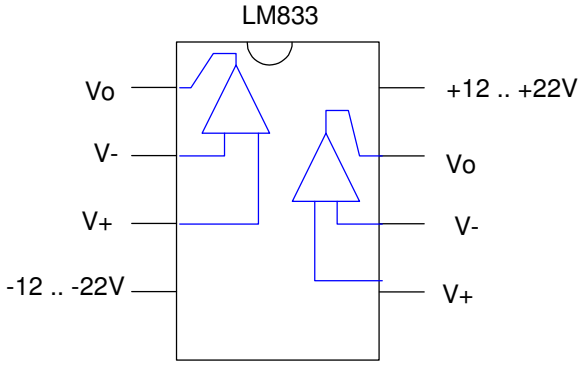

	LM741	LM833	Ideal
Input Resistance	2M Ohms	4G Ohms	infinite
Output Resistance	75 Ohms	20 Ohms	0
Output Short Circuit Current:	25mA	50 mA	infinite
Operating Voltage	+/- 12V .. +/- 22V	+/- 2.5V .. +/- 15V	any
Diffential Mode Gain	200,000	100,000	infinite
Common Mode Rejection Ratio	90dB	100dB	common mode gain = 0
Slew Rate	0.5V/us	7V/us	infinite
Gain Bandwidth Product	1.5MHz	15MHz	infinite
Price (qty 100)	$0.35	$0.52	-

Translation

Input Resistance: The Thevenin equivalent of the op-amp at V+ and V-

Short Circuit Current: The maximum current you can get

Operating Voltage: What you need to make it work

Differential Mode Gain: The gain from (V+ - V-) to the output

Slew Rate: How fast the output can change.

Gain Bandwidth Product = 1.5MHz:

- If you want a gain of one, the bandwidth is 1.5MHz
- If you want a gain of 10, the bandwidth is 150kHz.
- etc.

Operational Amplifier Circuit Analysis

Problem: Write the voltage node equations for the following circuit. Assume (a) a LM741 op amp. (b) an ideal op-amp.

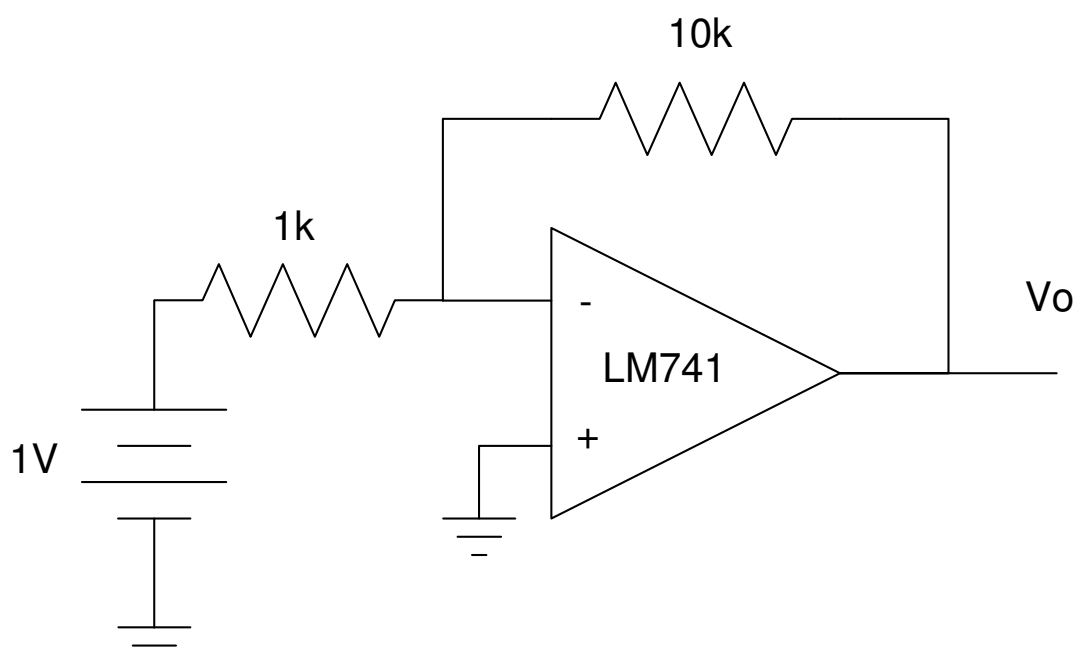

Figure 2: Find Vo for this op-amp circuit

741 Op Amp Analysis:

First, replace the op-amp with a model taking into account the input, output resistance and gains:

$$V_p = 0$$

$$\left(\frac{V_m - 1V}{1k}\right) + \left(\frac{V_m}{2M}\right) + \left(\frac{V_m - V_x}{10k + 75}\right) = 0$$

$$V_x = -199,994 V_m$$

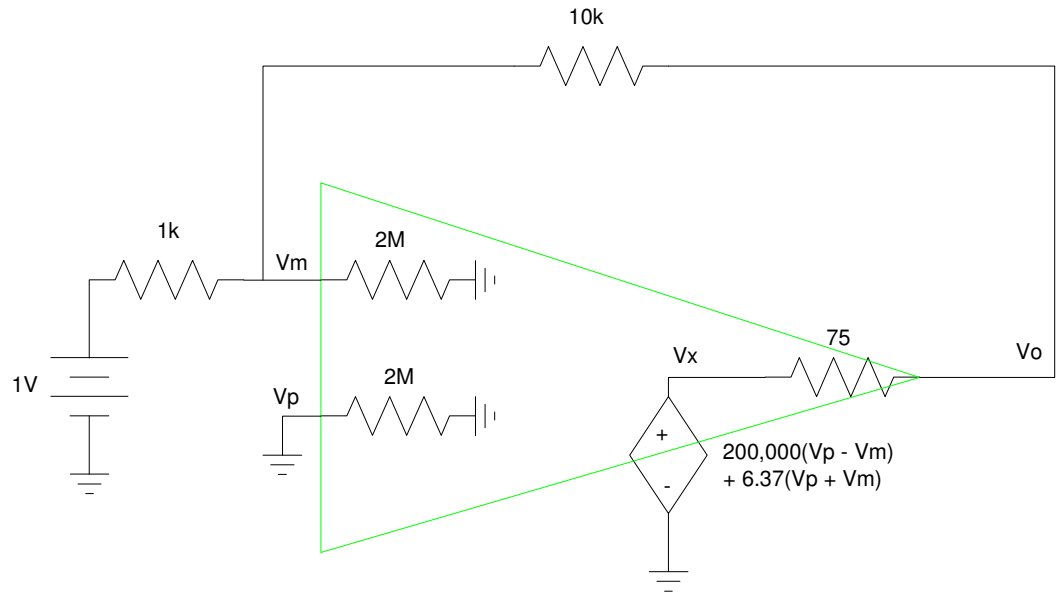

Solving

- Vp = 0.000 0000 V
- Vm = 0.000 050 V
- Vo = -9.999 940 V

Ideal Op Amp:

Note that many of the terms don't affect the output all that much:

- $2M\Omega \,||\, 1k\Omega \;\approx\; 1k\Omega$
- $0.0000504V \approx 0V$

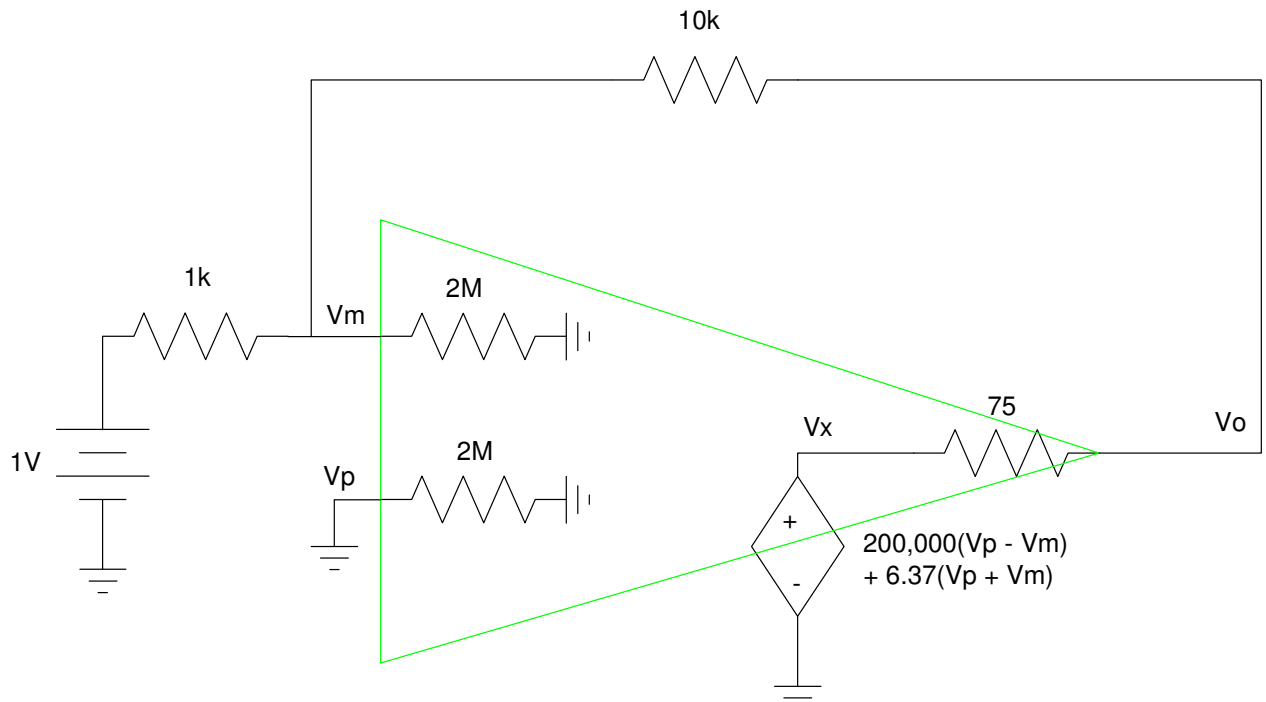

If you approximate these terms, you're essentially using an ideal-op amp.

This is *much* easier to analyze

$$V_p = 0$$

$$V_p = V_m$$

$$\left(\frac{V_m - 1V}{1k}\right) + \left(\frac{V_m - V_o}{10k}\right) = 0$$

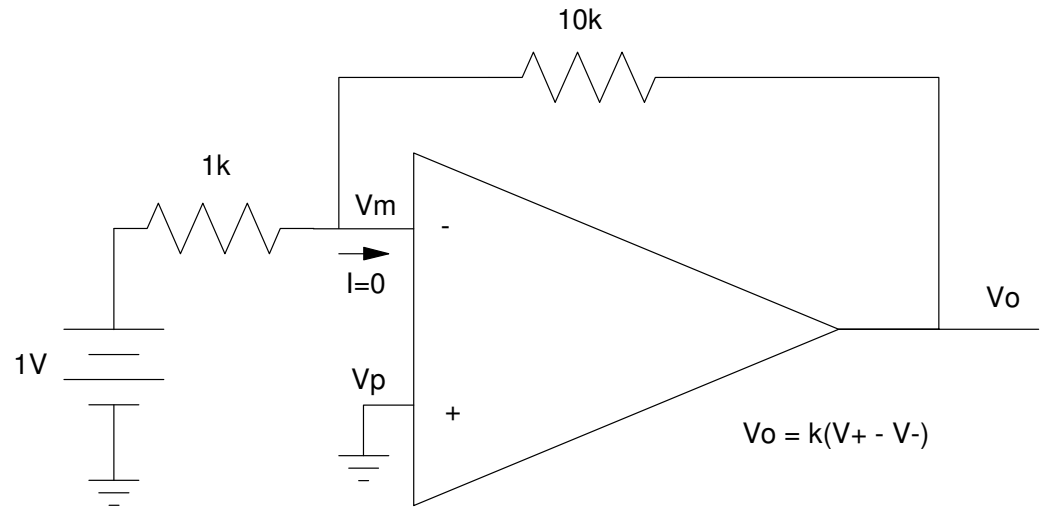

which gives

$$V_o = -10.000V$$

Note:

- When analyzing an op-amp circuit, you almost have to use voltage nodes.
- If assuming an ideal op-amp, the voltage node equation at Vo is

$$V_p = V_m$$

Example 2: Find V1..V4

- Assume ideal op-amps

$$V_p = V_m$$

meaning

$$V_1 = 2V$$

$$V_3 = 2V$$

$$\left(\frac{V_1-3}{100k}\right) + \left(\frac{V_1-V_2}{100k}\right) = 0$$

$$\left(\frac{V_3-V_2}{100k}\right) + \left(\frac{V_3-1}{20k}\right) + \left(\frac{V_3-V_4}{100k}\right) = 0$$

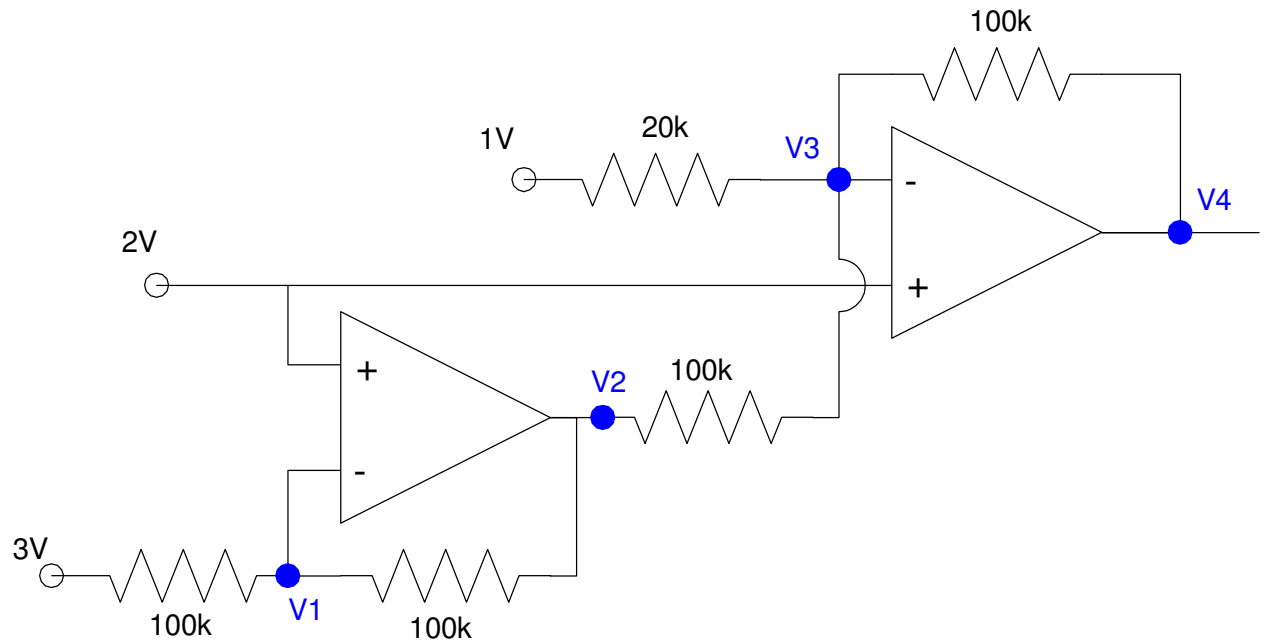

Solving gives V1 = 2.00V, V2 = 1.00V, V3 = 2.00V, V4 = 8.00V

- Same as CircuitLab

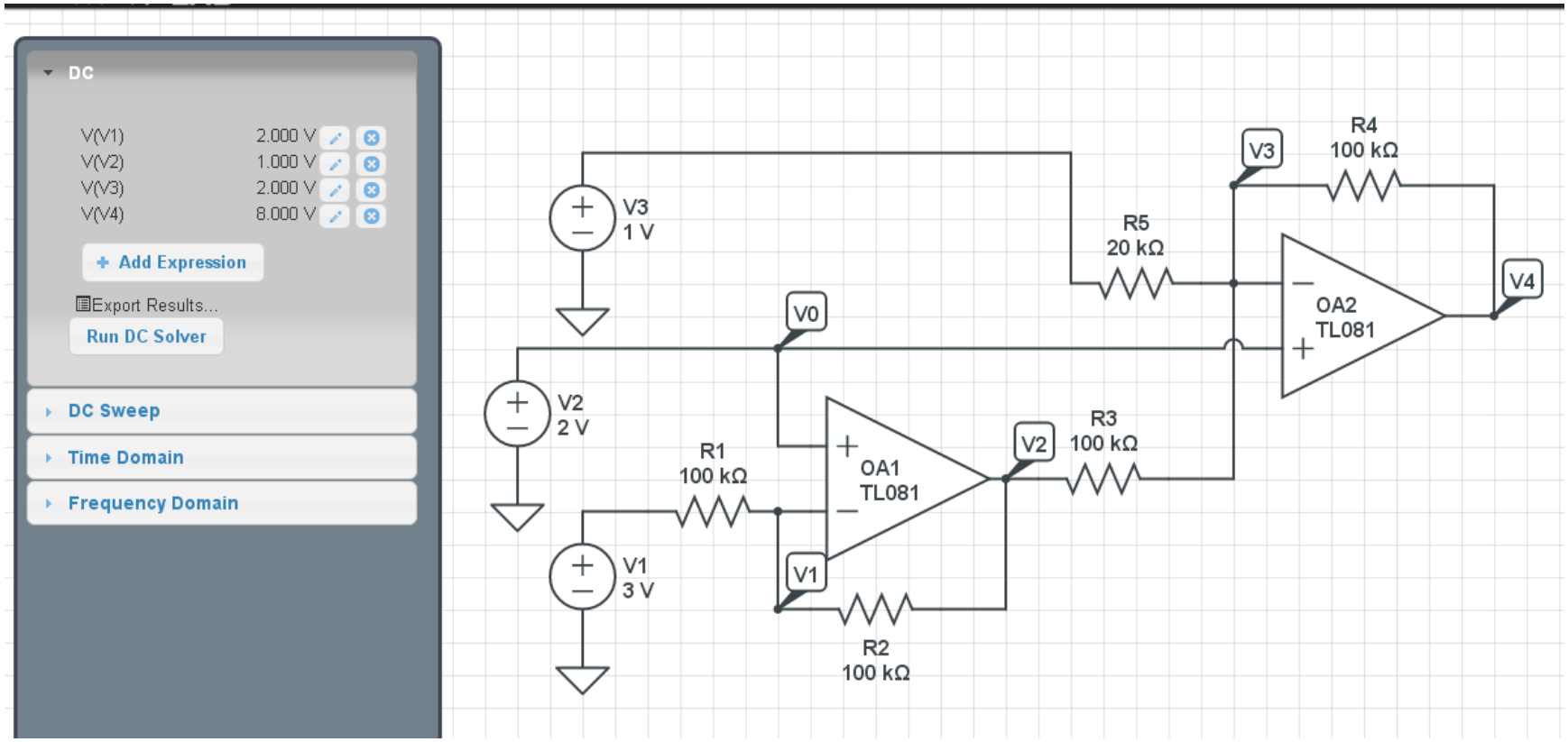

Example 3: Assume ideal op-amps. Find the node voltages.

$$V_1 = 2$$

$$V_3 = 2$$

$$\left(\frac{V_1}{1k}\right) + \left(\frac{V_1 - V_2}{2k}\right) = 0$$

$$\left(\frac{V_3 - V_2}{3k}\right) + \left(\frac{V_3 - V_4}{4k}\right) = 0$$

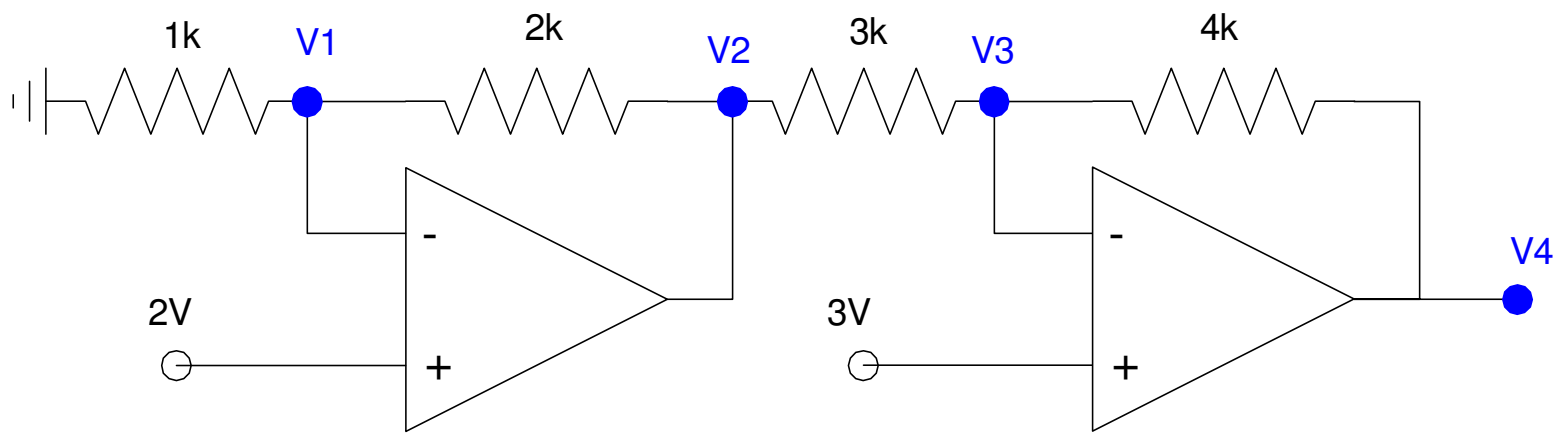

Solving

```
V1     2.0000
V2     6.0000
V3     3.0000
V4    -1.0000
```

Same as CircuitLab